Study of Damaged Wushi Bridge in Taiwan 921 Earthquake

By Yao T. Hsu[1] and Chung C. Fu[2], Members

Abstract: This paper reports on the damage of Wushi bridge in a recent Taiwan 921 earthquake. Damage to Wushi bridge appeared in the superstructure, the substructure and the approaches. Typical types of damage are discussed and illustrated in this paper. A review of the bridge design specifications in Taiwan is also presented to give the background on the seismic design of Taiwan highway bridges.

Introduction

. At 1:47 AM (local time), Tuesday, September 21, 1999, a devastating earthquake with a magnitude of 7.3 on the Richter scale struck central Taiwan. According to the seismic report published by the Taiwan Central Weather Bureau, the epicenter of this earthquake, so called Chi Chi or 921 earthquake, is located at 23.85° N and 120.81°E at a depth of 7.0 km (Fig. 1). The 921 earthquake was associated with two closely spaced faults, Chelungpu and Shuangtung faults (Fault lines 18 and 20 in Fig.1). These two faults are 10 km apart and almost in parallel. The hypocenter at the town of Chi Chi is at the intersection of these two faults. It was caused by the reversive fault movement at the subduction zone boundary of Euroasian and Philippino plates. The official estimates of the casualties and losses are 2,161 casualties, 8736 injuries and $3.7 billion property loss (NSF/ROC 1999). This is the strongest earthquake to hit Taiwan within the past 100 years and the most costly natural disaster.

Most casualties were due to numerous failures of non-ductile concrete buildings. Since the earthquake struck in the middle of the night, very few casualties were caused by failures of bridges. However, million of dollars were lost due to damage or collapse of bridges. Many damaged bridges along the key routes were repaired on a temporary basis. Others were put under investigation to find the strategy of retrofitting. Based on the severity of the damage and also the use for strategy of retrofitting, bridge failures due to this earthquake were divided into three groups:

(1) Severe case: Traffic was interrupted by failed bridge piers or falling beams;
(2) Moderate case: Controlled traffic was imposed due to settlement, damaged bearing, and cracking of decks, beams or piers;
(3) Minor case: Normal traffic is maintained with slight settlement, minor cracking, or minor horizontal movement.

[1] Associate Professor, Department of Transportation Engineering and Management, Feng Chia University, Taichung, Taiwan, R.O.C.
[2] Director and Associate Professor, Bridge Engineering Software and Technology (BEST) Center, Department of Civil Engineering, University of Maryland, U.S.A.

Highway damage was widespread throughout two central Taiwan counties, Taichung and Nantou. Hundreds of bridges from expressways to county roads are located in these two counties. Except for about 10% of the bridge population experiencing moderate-to-major damage, most escaped serious damage. Figure 2 shows measuring stations and their measured peak ground accelerations (PGAs). On the top of the cross are vertical accelerations, on the left are E-W horizontal ground accelerations and on the right are N-S horizontal ground accelerations. All those considered to be under 'near-field' action are subjected to intense horizontal and vertical ground motion as well as surface fault movement. The worst displacement caused by the 921 earthquake was about 7-8 meters along certain sections of the Chelungpu fault. It is understandable that if faults pass under the bridge and the dislocations are large, catastrophic incidents and even bridge collapses are bound to happen.

Site Investigation

The second day after the earthquake, even with the interrupted traffic, the first author led twelve students, divided into six groups, who rode motorcycles to visit the damaged bridge sites and took hundreds of pictures to build a large inventory for future reference. The second author also visited the sites a month later to collect more information, assess the damage and evaluate the causes. Wushi Bridge is one of the bridges inspected and is reviewed in this paper. Wushi bridge, located across the Chelungpu fault line (Fig. 2), shows multiple bridge failure modes and gives a representative case of bridge failure under earthquake. In general, it may be noticed that most of the problems can be blamed on designs based on early codes and the severity of the earth movement. Based on the measurement records along the fault line (Fig. 2), most of the ground accelerations were over 300 gal, some even as high as 1G, which are much higher than the latest design ground accelerations of 0.33G, 0.28G, 0.23G and 0.18G. If the measured acceleration records were used in the design, unexpected seismic actions and soil effects caused damage and collapses.

This paper gives a brief overview of the investigation and possible causes for damage to Wushi bridge. The bridge shows some complex failure modes caused by this earthquake. An overview of the causes of damage and collapse in this earthquake may offer reliable guidelines on deficiencies in bridge design and later considerations in improving code provisions.

Bridge Damage Investigation

Wushi is located on Provision Route 3 and is an essential link between Taichung and Nantou counties. The total length of the Wushi Bridge is 624.5 meters and the total width is 26 meters. The bridge consists of one northbound bridge and one southbound bridge, each with two lanes of 12.5 meters (Fig. 3). The northbound bridge was finished in the 1960's and the southbound one was completed in 1973. The superstructures used prestressed concrete I-beams with constant span length of 34.84 meters.

The cross section of the northbound and southbound super- and substructures are shown in Figure 4. It is noticed that the northbound substructures are wall type concrete piers and the southbound substructures are hammerhead concrete piers. They are all supported by 6-meter diameter, 13-16 meter shaft foundations.

Most of the design and construction information of the northbound bridge, constructed in the 1960's, is unavailable. The southbound bridge adopted $K_h = 0.15$ (equivalent to the peak ground acceleration PGA = 150 gal) as the earthquake design coefficient. Boring records show that the river bed was covered with pebbles and underlined by clay rock.

The Wushi bridge is a river crossing bridge and it incidentally crosses the Chelongpu Fault. The northern end of the bridge was the more severely damaged. One side of the fault was lifted vertically about 2.1-2.3 meters. Movement along the bridge=s longitudinal direction was estimated to be about 2.2-2.3 meters and the movement along the bridge=s transverse direction was about 2.1-2.3 meters. The third span of the northbound bridge crosses the subduction zone boundary with 45° reverse fault movement. The movement caused the superstructure of the first several spans to fall to the ground. Inspection (Fig. 5) showed clear evidence of fault uplifting on both sides of the fallen spans.

According to the published record from the Central Weather Bureau, the East-West PGA was 518 gal, North-South was 639 gal, and vertical was 416 gal. The surface permanent horizontal movement was 2.3 meters and 2.9 meters along the East-West and North-South, respectively.

The record closest to the site was made at the Freefield Strong Seismic Station TCUD71, which is about 5.5 Km southeast of the nearest town of Chao-Fung. After the Chi-Chi earthquake, Wushi bridge was severely damaged and the road was closed. Due to the slip movement, the first and second spans of the northbound bridge fell to the ground and the third span clearly showed lateral movement (Fig. 6). The northern end abutment of the northbound bridge was pushed by the span and the jigsaw type of expansion joint and the backwall board were demolished. Under the pressure, the backfill was pushed by the superstructure and moved upward (Fig. 7). Under horizontal vibration, substantial shear cracks showed on the southbound hammerhead concrete pier (Fig. 8). The cap of the first pier of the northbound bridge (P1N) cracked and the East side exterior PCI beams were flexured. The end diaphragms and shear blocks designed to prevent concrete beams from moving laterally were crushed as the whole superstructure moved westward (Fig. 9).

Review of Design Codes

Taiwan is located in an active seismic area. Bridge design based on earthquakes in Taiwan has a long history. There have been three major stages, starting from 1960:

(1) November 1960, the Department of Transportation published the first edition *of "Highway Bridge Engineering Design Specifications"* (DOT/ROC 1960) which divides the Taiwan area into two zones

with 0.1G and 0.15G, respectively. The second edition of the Specifications modified the coverage of the high seismic zone into one large area but still with ground accelerations of 0.1G and 0.15G. In 1970, the first freeway connecting northern and southern Taiwan was in the planning stage. A special project focusing on earthquakes was also underway and the coefficients, based on the geographic area, soil condition and importance of the bridge, were modified to 0.2, 0.15 and 0.1.

(2) January 1987, the Department of Transportation published "*Highway Bridge Design Specifications*" (MTC/ROC 1987) Based on the latest earthquake theory available at that time, the design horizontal coefficient k_h was determined by :

$$k_h = ZSIC_0 \quad \text{if the height of the bearing cap} \leq 15 \text{ m} \qquad (4)$$

$$k_h = \beta ZSIC_0 \quad \text{if the height of the bearing cap} > 15 \text{ m} \qquad (5)$$

Where k_h is the design horizontal coefficient ($\geq$0.1); C_0 is the baseline design earthquake coefficient (=0.15); Z is the zoning coefficient (1.2 for Strong Seismic Zone A, 1.0 for Strong Seismic Zone B, 0.8 for Moderate Seismic Zone and 0.6 for Weak Seismic Zone); S is the soil coefficient associated with ground period T_G, divided to four categories (Category 1: T_G <0.2, S=0.9; Category 2: 0.2$\leq T_G$ <0.4, S=1.0; Category 3: 0.4$\leq T_G$ <0.6, S=1.1; Category 4: T_G >0.6, S=1.2); I is the importance factor with 1.0 for important bridges and 0.8 for common bridges; β is the adjusted factor based on the bridge fundamental period and soil strata.

(3) January 1995, Department of Transportation *published "Highway Bridge Seismic Resistance Design Specifications*" (MTC/ROC 1995). Based on the latest codes of the United States and Japan, plus the local conditions, the National Center for Research on Earthquake Engineering (NCREE) in Taiwan conducted a study on highway bridge seismic resistance design and published new Specifications with a new design horizontal seismic coefficient V:

$$V = ZIW(C/F_u)_m/1.2\alpha_y \qquad (5)$$

where V is the least design horizontal seismic force; W is the total superstructure and substructure dead load (V/W can be considered as the design coefficient); Z is the zoning acceleration coefficient (0.33G for Seismic Zone 1A, 0.28G for Seismic Zone 1B, 0.23G for Seismic Zone B and 0.18G for Seismic Zone C); Importance Factor with important bridge 1.2 and common bridge 1.0; α_y is the initial earthquake amplification factor; C is the normalized acceleration response spectrum coefficient; F_u is the structural system seismic reduction factor and $(C/F_u)_m$ can be considered as the adjusted acceleration response spectrum coefficient.

It can be seen from the above evolution that bridge design based on seismic force has gone from a less governing force to a main governing design force, especially with substructures. It is also evident from site observation that very few bridges designed by (or satisfied) current codes (MTC/ROC 1995, AASHTO 1998, AASHTO/LRFD 1998) were damaged by the 1999 earthquake.

Study of the Failure Modes

921 earthquake severely damaged Wushi bridge. This bridge may give the impression of being rather straightforward structure system, composed of superstructures, substructures and foundations. However, the bridges damaged by this earthquake show some complex failure modes and they are discussed as follows:

(1) Abutment and Wingwall Failure: Potential slumping at bridge abutments has traditionally been ignored during design in Taiwan. As far as earthquakes are concerned, there are two types of bridge abutments: integral abutment and seat-type abutment. The essential difference is that one (seat-type) permits relative movement to occur between the superstructure and end support and the second type (integral) does not. After filling the gap between the seat and the abutment back wall in Wushi bridge, the backfill and road surface did not allow further movement. Impact of the superstructure generated high passive pressure, resulting in rotation with damage to the top and pile supporting system. The recommendation for minimizing the drop of the road elevation is to be able to install approach slabs. Simple span reinforced concrete slabs can be designed with a minimum length of 3 meters for the approach slab. Figure 7 shows clearly the back-fill settlement. It has also been learned that abutment back-wall, back-fill and approach slabs should be carefully designed and constructed to prevent collapse.

(2) Substructure damage: Wall piers and hammerhead single column piers are used in substructures on north- and southbound, respectively. It is well known that it is economically feasible to design columns to yield and dissipate significant amounts of energy and to perform in a ductile manner. However, with relatively short columns and much stiffness in the transverse direction, shear cracks appeared on piers P1S, P2S, P3S, P5S, P7S, P8S. Typical shear crack shows in Figure 8.
Shaft foundation was used in Wushi bridge to support piers. Since the fault line crosses between piers 2 and 3, parts of the foundation, especially ones close to the fault line, were severely damaged and some settled (Fig. 10).

(3) Superstructure Failure: The main reason for the severe superstructure failure was the major fault movement in the horizontal and vertical directions. Since the fault line intersects the bridge at 45 degrees, the superstructure pushed and pulled in the longitudinal direction and, in the mean time, impacted upon the shear blocks in the transverse direction. Due to large movements, the bridge

collapsed with fallen beams on the first two spans. Span failure in this case was due to unseating, which includes pier tilting, insufficient seat length and inadequate restraining force capacity.

Conclusion

Most of the observations briefly addressed in this paper were collected from the field survey conducted by the authors. In general, it may be noticed that most of the damage and collapses arise from design or large movement near the fault line rather than from construction or material inadequacy. As stated earlier in this paper, an overview of the causes of damage and collapse from this earthquake may offer reliable guidelines on the deficiencies in bridge design and considerations for improving code provisions later.

Reference

AASHTO, *"Standard Specifications for Highway Bridges,"* 16th Edition, 1996, with Interims up to 1998, American Association of State Highway and Transportation Officials, Washington, DC

AASHTO, *"AASHTO LRFD Bridge Design Specifications,"* 2nd Edition, 1998, American Association of State Highway and Transportation Officials, Washington, DC

The Department of Transportation (DOT/ROC) *"Highway Bridge Engineering Design Specifications,"* Taiwan, the Republic of China, 1960.

The Ministry of Transportation and Communication (MTC/ROC) *"The Design Specifications for Highway Bridges,"* Taiwan, the Republic of China, 1987.

The Ministry of Transportation and Communication (MTC/ROC) *"The Seismic Design Specifications for Highway Bridges,"* Taiwan, the Republic of China, 1995.

National Science Foundation (NSF/ROC) *"Summarized Report on Damaged Bridges due to Chi-Chi Earthquake, 1999/9/21,"* Taiwan, the Republic of China, December 1999.

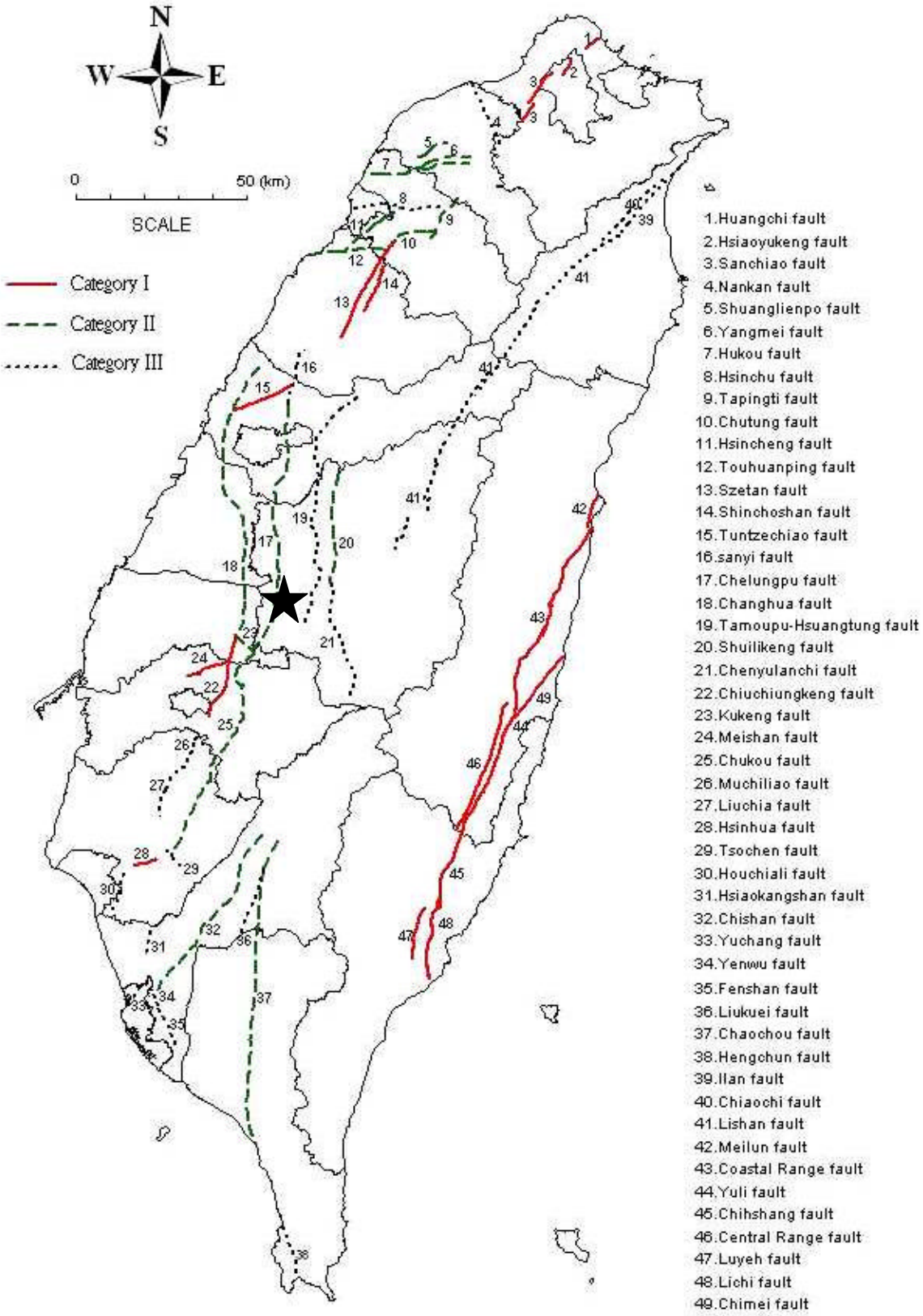

Figure 1 Epicenter and Active Faults in Taiwan

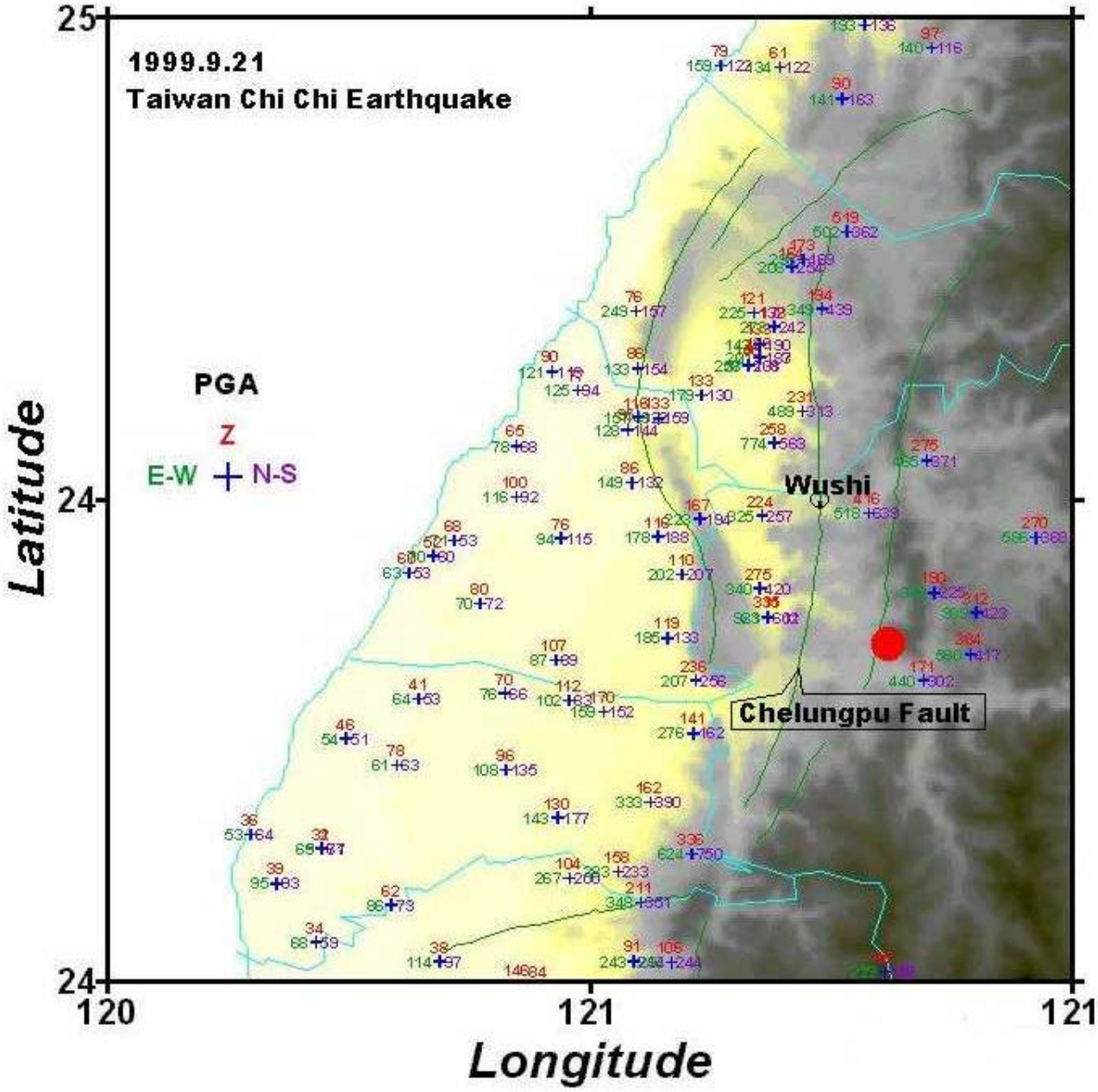

Figure 2 - Wushi Bridge, Epicenter, Chelungpu Fault line and Surrounding Stations
(Ref: Central Weather Bureau, The Ministry of Transportation and Communication, Taiwan, ROC)

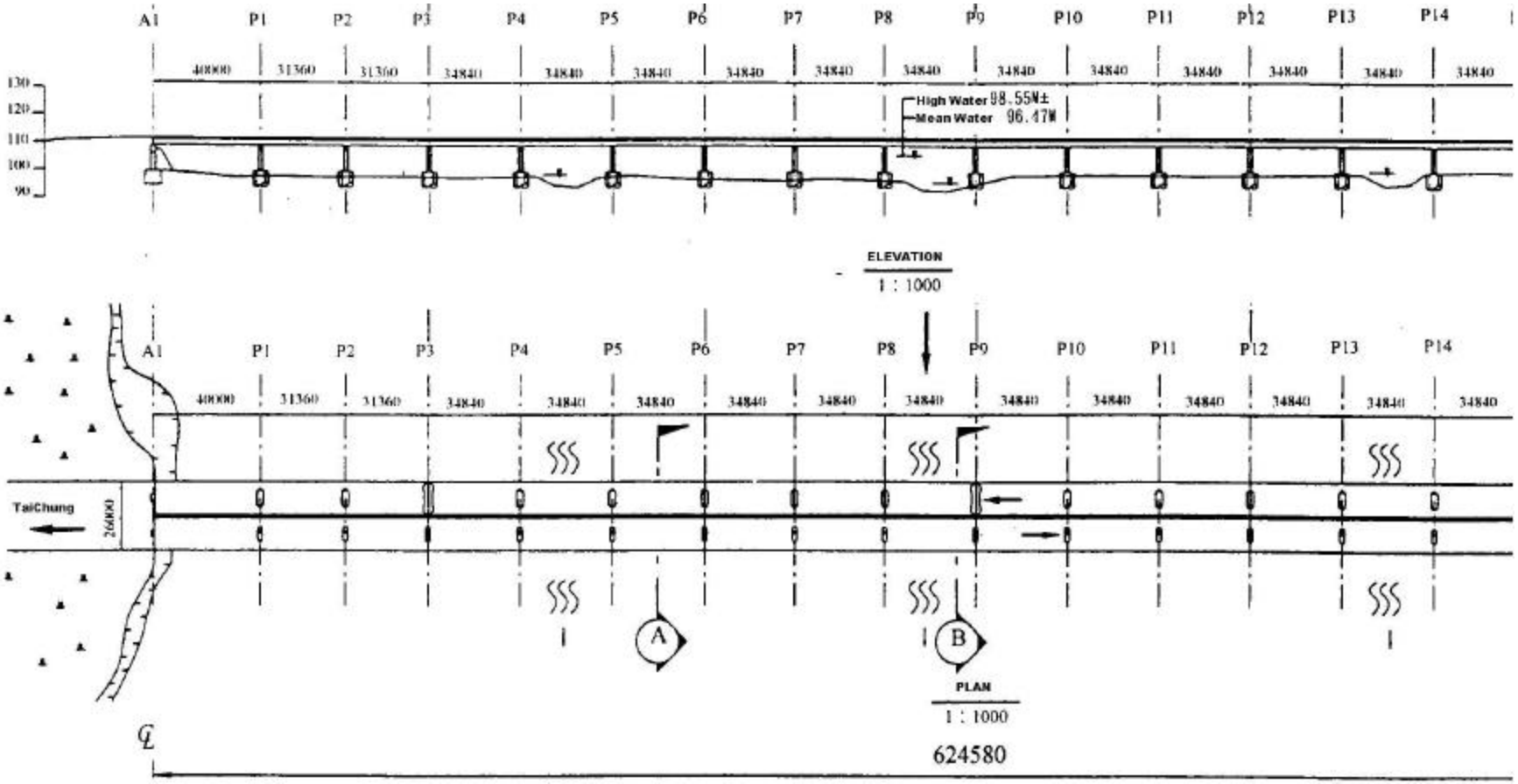

Figure 3 - Plan and Elevation of Wushi Bridge

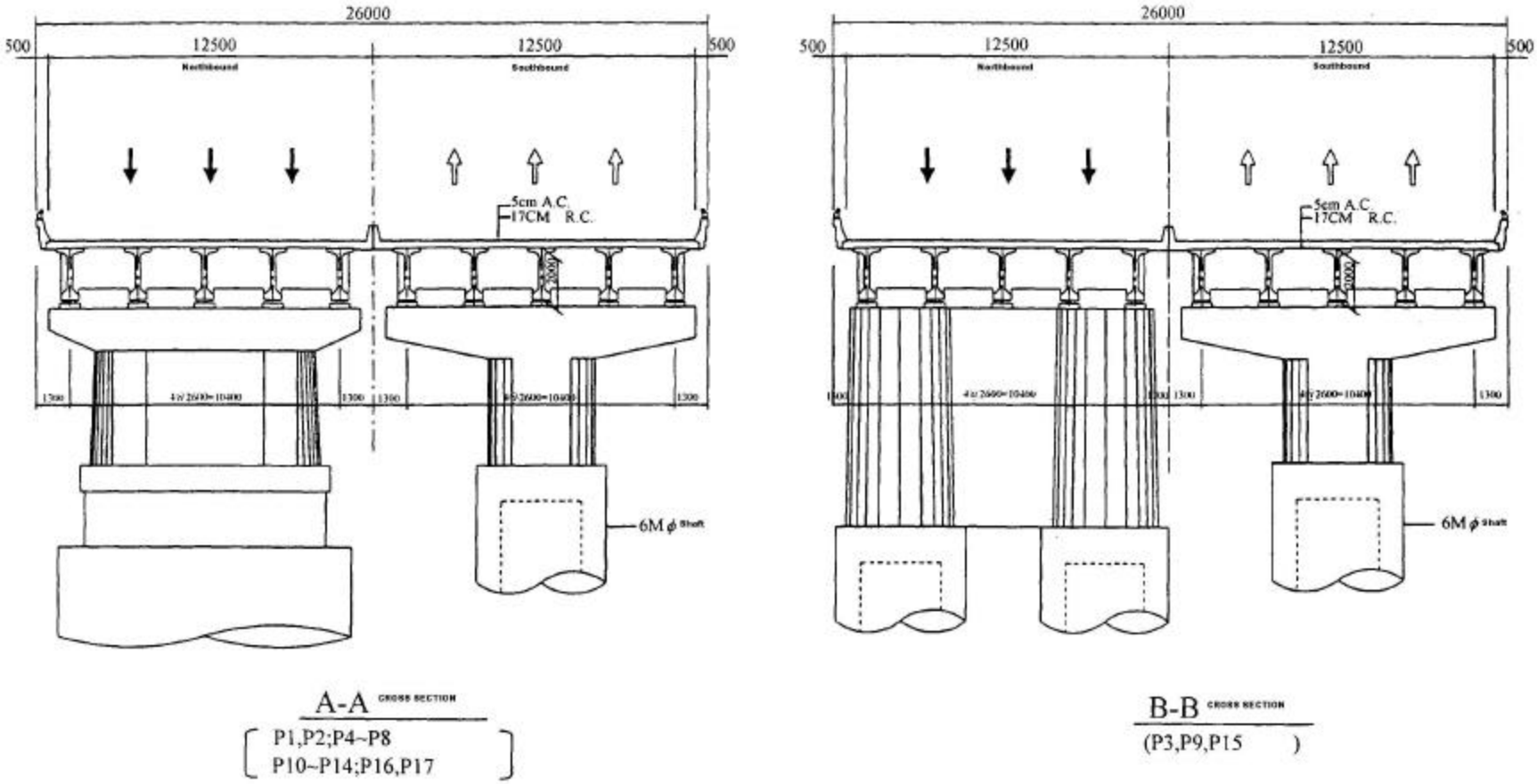

Figure 4 - Cross Sections of Wushi Bridge

Figure 5 - Oblique Fault Movement between Piers P3N and P3S

Figure 6 - Fallen Beam due to Superstructure Movement in the Longitudinal Direction at Pier P2N

Figure 7 - Backfill Upward Movement at the North Abutment of the Northbound Bridge

Figure 8 - Shear Cracks on the Southbound Hammerhead Concrete Pier p2S

Figure 9 - Crushed End Diaphragms and Shear Blocks at Pier P1N

Figure 10 - Pier Settlement and Shaft Shear Cracks at Pier P3N

Figure 1 Epicenter and Active Faults in Taiwan

Figure 2 - Wushi Bridge, Epicenter, Chelungpu Fault line and Surrounding Stations
(Ref: Central Weather Bureau, The Ministry of Transportation and Communication, Taiwan, ROC)

Figure 3 - Plan and Elevation of Wushi Bridge

Figure 4 - Cross Sections of Wushi Bridge

Figure 5 - Oblique Fault Movement between Piers P3N and P3S

Figure 6 - Fallen Beam due to Superstructure Movement in the Longitudinal Direction at Pier P2N

Figure 7 - Backfill Upward Movement at the North Abutment of the Northbound Bridge

Figure 8 - Shear Cracks on the Southbound Hammerhead Concrete Pier p2S

Figure 9 - Crushed End Diaphragms and Shear Blocks at Pier P1N

Figure 10 - Pier Settlement and Shaft Shear Cracks at Pier P3N